Penultimate Approximations: Past, Present . . . and Future?

M. Ivette Gomes

CEAUL, Universidade de Lisboa, Portugal

(joint work with Paula Reis, Luísa Canto e Castro & Sandra Dias)

FCT Fundação para a Ciência e a Tecnologia
MINISTÉRIO DA CIÊNCIA, TECNOLOGIA E ENSINO SUPERIOR Portugal

Research partially supported by National Funds through **FCT** — Fundação para a Ciência e a Tecnologia, projects PEst-OE/MAT/UI0006/2011 and EXTREMA, PTDC/MAT/101736/2008.

Repeating what I said in Shanghai two months ago, and last Sunday after the Dinner, it was indeed true that when **RICHARD DAVIS** at **EVA 2009** spoke about **VIMEIRO**'s meeting as **EVA–0**, and when read at **EVA 2013** website:

"It has been 30 years since the so-called zero-th EVA conference took place in 1983 in Vimeiro, a small town near the beach in Portugal" . . .

I indeed felt

Some "Nostalgia" . . .

And now, here we are in **VIMEIRO**, essentially thanks to my dear colleagues and friends, **Antónia**, **Isabel** and **Manela**.

But possibly it will be necessary to renumber **EVA-0**

Prior to **EVA** meetings, I think we cannot forget:

- **Oberwolfach**, 1987, *Conference on Extremewertheorie*.
- **Villeneuve d'Ascq**, 1992, *XIII Rencontres Franco-Belges de Statisticiens — Résultats Nouveux en Théorie de Valeurs Extrêmes et Applications*.
- **Gaithersburg**, 1993, *Conference on Extreme Value Theory and its Applications*.
- **Rotterdam**, 1994, *Conference on Multivariate Extreme Value Estimation with Application to Economics and Finance*.

But let's go back to VIMEIRO 1983:

This was the unique picture I had from Vimeiro's meeting—1983

But the one at EVA 2013 website is better—and with Feridun

Some of the invited speakers:

Clive Anderson	Ross Leadbetter	Holger Rootzen
Paul Deheuvels	Georg Lindgren	Masaaki Sibuya
Benjamim Epstein	Yashaswini Mittal*	J Tiago de Oliveira
Janos Galambos	James Pickands III	Jef Teugels
Laurens de Haan	Sid Resnick	Ishay Weissman

Other speakers:

Barry Arnold	Abraham Hasofer	Dan Rosbjerg
Richard Davis	David Mejzler	Richard Smith
Anthony Davison	Juerg Huesler	Feridun Turkman
Ivette Gomes*	Rolf-Dieter Reiss	Jose Villasenor

Portuguese PhD students:

Teresa Alpuim*	Isabel Barão*	Fátima Miguens*
Emília Athayde*	Eugénia Graça Martins*	Manuela Neves*
	Helena Iglésias Pereira*	Fernando Rosado

ORGANIZERS



TIAGO IVETTE FERIDUN

SHADOW ORGANIZERS


ANTÓNIA DINIS

And what about EVT 2013?

Vimeiro 1983 GANG (18)

AMARAL TURKMAN, Antónia
ANDERSON, Clive
ARNOLD, Barry
BARÃO, Isabel
DAVIS, Richard
DAVISON, Anthony
GOMES, Ivette
HUESLER, Juerg
IGLÉSIAS PEREIRA, Helena
LEADBETTER, Ross
LINDGREN, Georg
NEVES, Manuela
PESTANA, Dinis
REISS, Rolf-Dieter
ROOTZEN, Holger
TEUGELS, Jef
TURKMAN, Feridun
WEISSMAN, Ishay

Senior intervenients (23)

BEIRLANT, Jan
BRITO, Margarida
CAROLINO, Elisabete
CANTO E CASTRO, Luísa
CHAVEZ-DEMOULIN, Valérie
EMBRECHTS, Paul
FALK, Michael
FERREIRA, Ana
FERREIRA, Helena
FIGUEIREDO, Fernanda
FRAGA ALVES, Isabel
GIRARD, Stephane
GUILLOU, Armelle
KRATZ, Marie
MARKOVICH, Natalia
MENDONÇA, Sandra
MIKOSCH, Thomas
NOLAN, John
PEREIRA, Luísa
PICEK, Jan
RAMOS, Alexandra
TAWN, Jonathan
TEMIDO, Maria da Graça
-

Young intervenients (28)

AULBACH, Stefan
CAEIRO, Frederico
DEMATTEO, Antoine
DIAS, Alexandra
DIAS, Sandra
FERREIRA, Marta
FREITAS, Ana Cristina
FREITAS, Jorge
GOUVEIA REIS, Délia
KIRILIOUK, Anna
MARTINS, Ana Paula
MAZO, Gildas
NASCIMENTO, Fernando
NORTHROP, Paul
NUNES, Sandra
OSMANN, Michael
PADILLA, Maria
PADOAN, Simone
PENALVA, Helena
PRATA GOMES, Dora
REIS, Paula
SABOURIN, Anne
SEIFERT, Miriam Isabel
SERRA MOCHALES, Isabel
SHABY, Benjamin
STEHLIK, Milan
WARCHOL, Michal
WORMS, Rym

It was indeed very gratifying to see so many young people. This means that the field is alive and promising . . .

But, let's go into Science . . .

And like I did at EVA'13, I dedicate this talk to the memory of TIAGO de OLIVEIRA (1928–1992)...

Chair of the OC of the **NATO ASI on SEA**, and one of the main responsibles for my change from **ALGEBRA** to **PROBABILITY and STATISTICS** ...

WHY PENULTIMATE APPROXIMATIONS AGAIN?

HISTORICAL FACTS:

- Clive Anderson, my Ph.D. supervisor, sequentially provided me with different topics of research, among which *rates of convergence and penultimate approximations* . . . , one of his favourite topics, I think . . .
- Among the articles I read during my stay in Sheffield, UK (1975–1978), the one that influenced me most was possibly the one by **FISHER & TIPPETT** (1928), and the aforementioned topic.
- And indeed I still think there is some kind of **magic** in this topic, because this my first passion has been intermittently revisited after my Ph.D. thesis [**GOMES**, 1978]. I'm thinking on **GOMES** (1982a; 1982b; 1984; 1986; 1994), **GOMES & PESTANA** (1984) and **GOMES & de HAAN** (1999).

AND NOW, THE PRESENT. . . and the FUTURE?

- Recently, my colleague and friend, Luísa Canto e Castro, one of my first Ph.D. students, now *General Director* of the *Dept. of Statistics of the Ministry of Education and Science*, has supervised Paula Reis, who got her Ph.D. degree in 2012, in a topic relating *penultimate approximations* and *reliability of large and coherent systems*.
- And just by chance, but enthusiastically, I was involved in this research . . . and in a way that I have really appreciated, because I was able to find a possible strong link between this topic in the field of *extreme value theory* (EVT) and another field I love, *statistical process control and reliability*.
- And sincerely, I think that there is still a lot to be done . . . provided we have time and patience for that.

OUTLINE

- **Importance of Order Statistics (OS) in Reliability** — In reliability theory any coherent system can be represented as either a series-parallel (**SP**) or a parallel-series (**PS**) system, and its lifetime can thus be written as the *minimum of maxima* or the *maximum of minima*.

- **Main Limiting Results in Extreme Value Theory (EVT)** — For large-scale coherent systems it is sensible to assume that the number of system components goes to infinity. Then, the possible non-degenerate extreme value distributions (**EVD**) either for maxima (**EV$_{\mathrm{M}}$D**) or for minima (**EV$_{\mathrm{m}}$D**) are eligible candidates for the system reliability or at least for the finding of adequate lower and upper bounds for such a reliability.

- **Ultimate and Penultimate Models for the Sequence of RFs of a Regular Homogeneous PS System** — The identification of the possible ultimate limit laws for the system reliability of homogeneous **PS** systems is sketched. In most situations such non-degenerate limit laws are better approximated by an adequate penultimate distribution.

- **A Small-Scale Simulation Study** — Dealing with regular and homogeneous **PS** systems, we assess the gain in accuracy when a penultimate approximation is used instead of a ultimate limiting approximation.

FUTURE . . . and out of the scope of this presentation

- Similar results can be straightforwardly obtained for **homogeneous SP** systems.
- **Generalizations** of the **classical i.i.d.** set-up are feasible and in progress.
- More intricate but similar work can be done for **non-homogeneous** systems.
- **Applications to real data** are also in progress.

Introduction

- **Motivation:** The study of the exact *reliability function* (**RF**) of complex technological systems with lifetime T, given by

$$\boxed{R_T(t) := \mathbb{P}(T > t) = 1 - F_T(t),}$$

can be an intractable problem due to:

$\longrightarrow$ their large number of components;

$\longrightarrow$ the way the operating process uses such components.

- **Examples**: Among others, we mention **transport networks** of **oil**, **gas** and **water**, **telecommunication** and **electrical energy distribution networks**, **charge** and **discharge networks**.

- **Our strategy is essentially the following**:
  1. Assuming that the number of components of a system **S** goes to infinity,

     asymptotic EV or **ultimate models**
     $\Downarrow$
     often provide **a good interpretion** of the **RF** of **S**

  2. Considering a fixed large number of components,

     pre-asymptotic or **penultimate models**
     $\Downarrow$
     provide an **improvement of the convergence rate**
     $\Downarrow$
     and a better aproximation to the **RF** of **S**.

1. Importance of OS in Reliability

- Let T denote the lifetime of a coherent structure with n components, with lifetimes $(T_1, \ldots, T_n)$, possibly with the same common d.f. F.
- Let us denote $(T_{1:n} \leq \cdots \leq T_{n:n})$ the sample of associated ascending OS, with $T_{1:n} = \min_{1 \leq i \leq n} T_i$, $T_{n:n} = \max_{1 \leq i \leq n} T_i$.
- The main importance of OS in reliability lies on the fact that the r.v. T can always be written as a function of OS associated to the r.v.'s T_i, $1 \leq i \leq n$. See **GNEDENKO, BELYAYEV & SOLOVYEV**, 1969, *Mathematical Methods of Reliability Theory*, among others.
- Indeed, we have $T = T_{I:n}$, where I is a discrete r.v. with support $\{1, 2, \ldots, n\}$. The vector $\underline{s} := (s_1, s_2, \ldots, s_n)$, with $s_i := \mathbb{P}(I = i)$, $1 \leq i \leq n$, is the so-called signature of the system [**SAMANIEGO**, 1985, *IEEE Trans. Reliab.*].

Moreover, we state the following relevant result in reliability:

Theorem 1 (**BARLOW & PROSCHAN**, 1975, *Statistical Theory of Reliability and Life Testing: Probability Models*). *Any coherent structure can be represented either as a* **SP** (*a series structure with components connected in parallel*) *or a* **PS** (*a parallel structure with components connected in series*) *structure.*

Example 1. *Let us consider the simple bridge structure:*

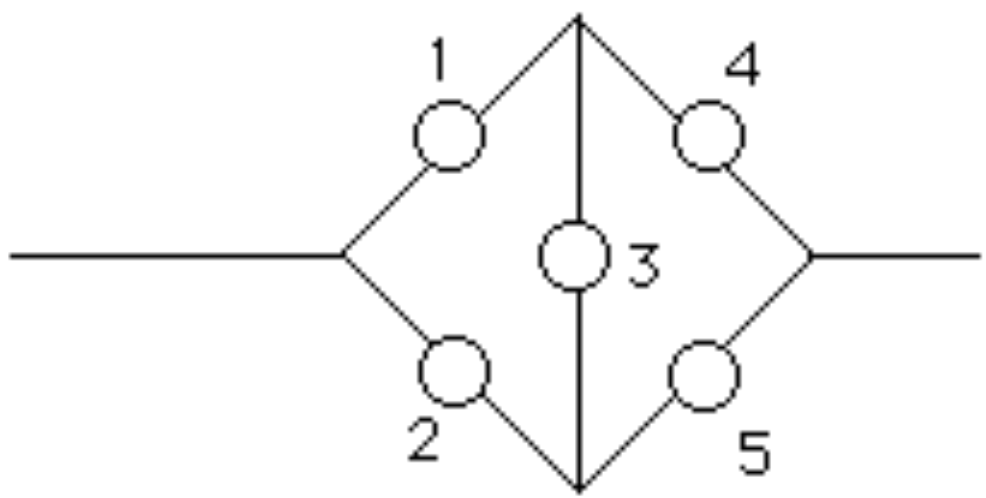

- In order to find the aforementioned representations in **Theorem 1** we need to identify the so-called
  - *minimal paths* — paths without irrelevant components that enable the operation of the system, and the so-called
  - *minimal cuts* — a set of relevant components that will imply the failure of the system whenever removed.

- In the bridge structure, we have:
  - *Minimal paths*: {1,4}, {2,5}, {1,3,5}, {2,3,4};
  - *Minimal cuts*: {1,2}, {4,5}, {1,3,5}, {2,3,4}.

- Consequently, we have the following representations of the initial bridge system:

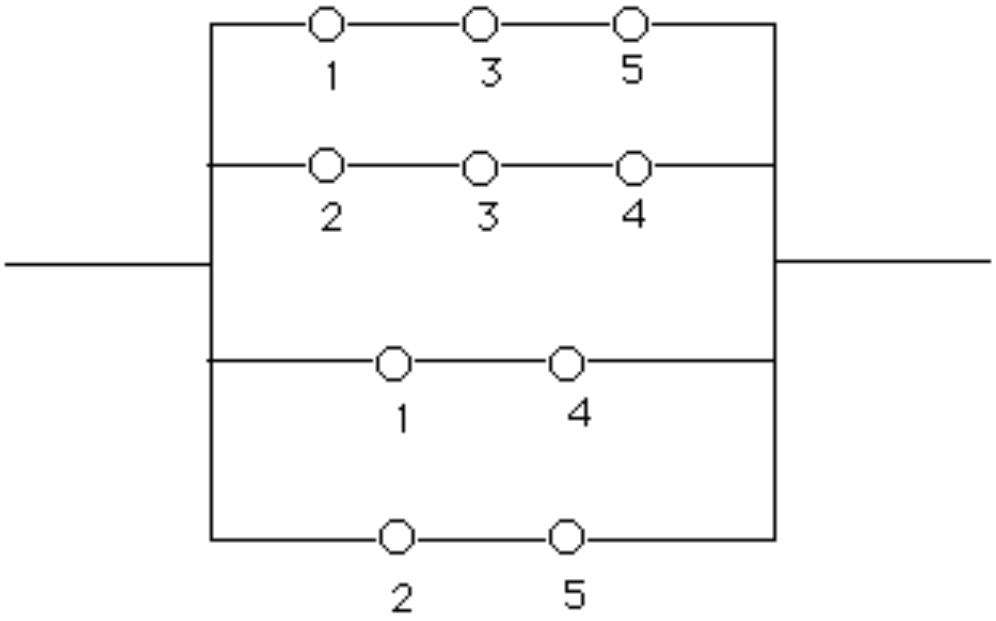

and

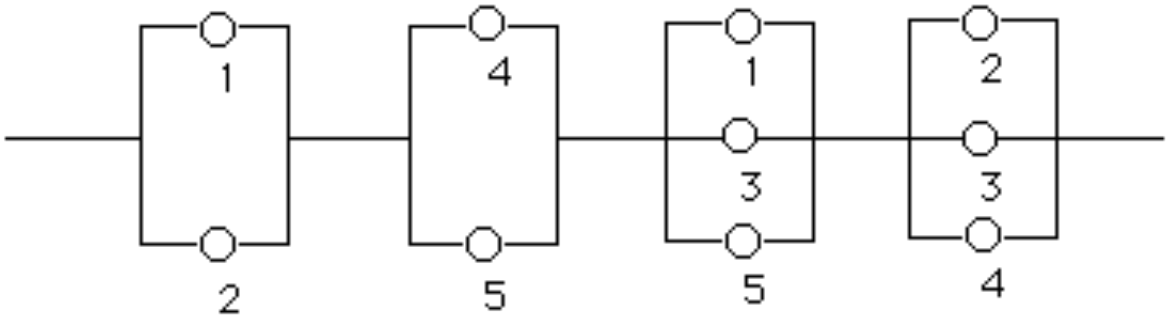

We can thus write,

$$\boxed{T = \max\big(\min(T_1, T_3, T_5), \min(T_2, T_3, T_4), \min(T_1, T_4), \min(T_2, T_5)\big)}$$

as well as

$$\boxed{T = \min\big(\max(T_1, T_2), \max(T_4, T_5), \max(T_1, T_3, T_5), \max(T_2, T_3, T_4)\big).}$$

- We obviously need to pay attention to the strong dependence of the different r.v.'s either in the overall max or min operators.

- But we can build lower and upper bounds for the reliability on the basis of the minimal cuts (assuming they are independent) and minimal paths (assuming they are disjoint), respectively.

- Generally speaking, let $P_j, 1 \leq j \leq p = p_n$, denote the minimal paths, and $C_j, 1 \leq j \leq s = s_n$, the minimal cuts. Then, and for non-necessarily i.d. components, we have

$$\boxed{\prod_{j=1}^{s}\left(1-\prod_{i\in C_j}(F_i(t))\right) \leq R_T(t) \leq 1-\prod_{j=1}^{p}\left(1-\prod_{i\in P_j}(1-F_i(t))\right).}$$

- For sake of simplicity, we now assume that all minimal paths have the same size $l = l_n$ and that all minimal cuts have a size $r = r_n$ (the so-called *regular* system), and that $R_i(t) = R(t)$, $1 \leq i \leq n$ (the so-called *homogeneous* system). Then, with

$$\boxed{L_{SP}(t) := \Big(1-(1-R(t))^{r_n}\Big)^{s_n} =: \Big(1-M_{r_n}(t)\Big)^{s_n}}$$

and

$$\boxed{U_{PS}(t) := 1-\Big(1-R^{l_n}(t)\Big)^{p_n} =: 1-\Big(m_{l_n}(t)\Big)^{p_n},}$$

we get

$$\boxed{L_{SP}(t) \le R_T(t) \le U_{PS}(t),}$$

$n = r_n s_n = l_n p_n$.

The above lower and upper bounds are quite reliable, particularly when compared with the crude lower and upper bounds respectively given by associated series and parallel systems, with all the n components of our system **S**, given by

$$\boxed{L_S(t) := 1-m_n(t) = (1-F(t))^n = R^n(t)}$$

and

$$\boxed{U_P(t) := 1 - M_n(t) = 1 - F^n(t) = 1 - (1 - R(t))^n.}$$

We obviously get

$$\boxed{L_S(t) \leq R_T(t) \leq U_P(t),}$$

but L_{SP} and L_{PS} are much more accurate, as can be seen from the following Figure, where we consider the static counterpart of the **RF**, writing $p := R(t)$, and represent for $l_n = r_n = 4$ and $s_n = p_n = 15$ (i.e. $n = 60$), the lower bounds

$$\boxed{L_S = p^n \quad \text{and} \quad L_{SP} = \left(1 - (1 - p)^{r_n}\right)^{s_n},}$$

as well as the upper bounds

$$\boxed{U_P := 1 - (1 - p)^n \quad \text{and} \quad U_{PS} := 1 - \left(1 - p^{l_n}\right)^{p_n}.}$$

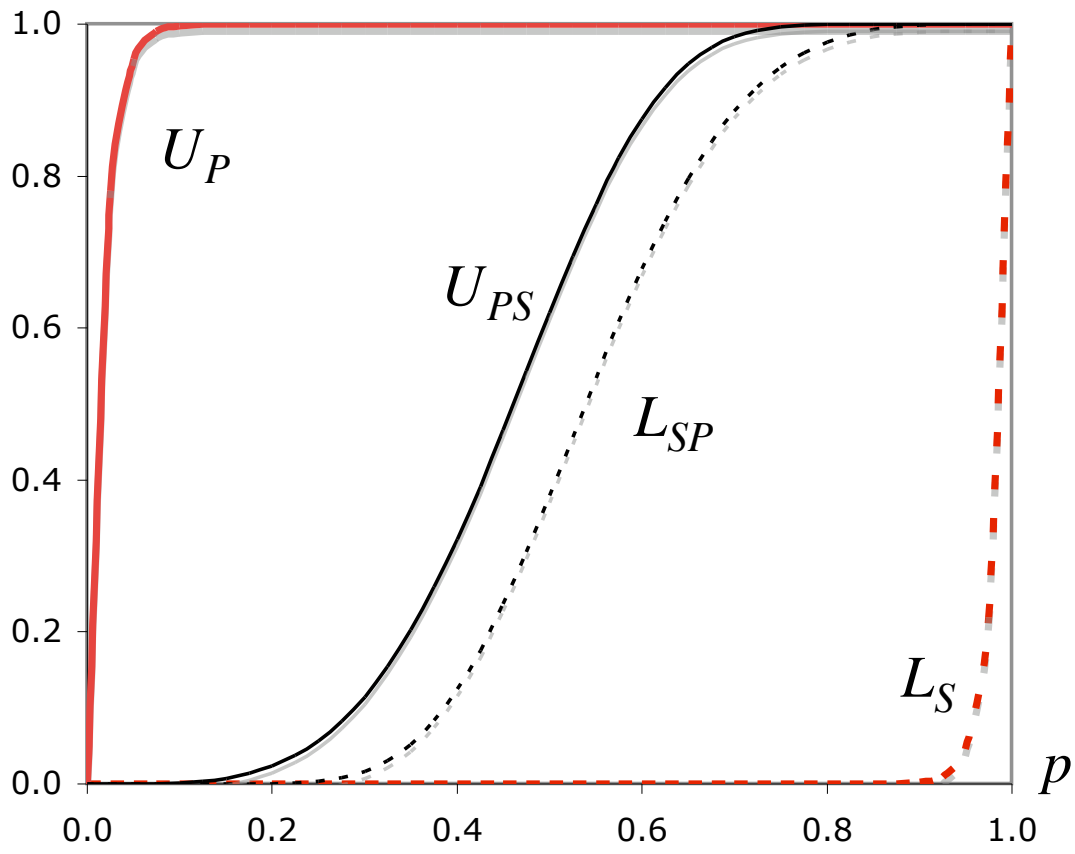

Lower and upper bounds for reliability

2. Main Limiting Results in EVT

- Let $\underline{\mathbf{X}}_n = (X_1, \ldots, X_n)$ be a sample of size n of i.i.d., or even weakly dependent r.v.'s with d.f. F, and let $X_{i:n}$, $1 \leq i \leq n$, denote the associated ascending o.s.'s.
- *Extreme Value Theory* (**EVT**) provides a great variety of limiting results that enable us to to deal with alternative approaches in the statistical analysis of extreme events.
- The main *limiting* result in **EVT** is due to **GNEDENKO** (1943), *AM*. In this seminal paper, BV Gnedenko has fully characterized the possible non-degenerate limiting distribution of the linearly normalized maximum, $(X_{n:n} - b_n)/a_n$, $a_n > 0$, $b_n \in \mathbb{R}$. Such a limit is of the type of the general *extreme value* (**EV**) *distribution* for maxima (**EV**$_{\mathrm{M}}$**D**), the unique max-stable law, given by

$$G(x) \equiv G_\gamma(x) := \begin{cases} \mathrm{e}^{-(1+\gamma x)^{-1/\gamma}}, \ 1+\gamma x > 0 & \text{if} \quad \gamma \neq 0 \\ \mathrm{e}^{-\mathrm{e}^{-x}}, \ x \in \mathbb{R} & \text{if} \quad \gamma = 0. \end{cases}$$

- The shape parameter γ, the so-called *extreme value index for maxima* (**EVI**$_{\mathrm{M}}$), measures the heaviness of the *right-tail* (or reliability) function $\overline{F}(x) \equiv R(x) := 1 - F(x)$, as $x \to +\infty$ and the heavier the right-tail, the larger γ is.

- The **EV**$_{\mathrm{M}}$**D** is sometimes separated in the three following types,

Type I (Gumbel) :	$\Lambda(x) = \exp(-\exp(-x)), \ x \in \mathbb{R}$
Type II (Fréchet) :	$\Phi_\alpha(x) = \exp(-x^{-\alpha}), \ x \geq 0$
Type III (max-Weibull) :	$\Psi_\alpha(x) = \exp(-(-x)^\alpha), \ x \leq 0,$

with $\alpha > 0$, the types considered in **GNEDENKO** (1943).

Remark 1. *Any result for maxima has its counterpart for minima due to the fact that* $\min_{1\le i\le n} X_i = -\max_{1\le i\le n}(-X_i)$. *We thus have the min-stable laws or* **EV$_{\mathrm{m}}$D**

$$\boxed{G^*(x) \equiv G^*_\theta(x) := \begin{cases} 1 - \mathrm{e}^{-(1-\theta x)^{-1/\theta}}, \ 1-\theta x > 0 & \textit{if} \quad \theta \neq 0 \\ 1 - \mathrm{e}^{-\mathrm{e}^x}, \ x \in \mathbb{R} & \textit{if} \quad \theta = 0. \end{cases}}$$

- We then say that the d.f. F of a r.v. X is in the min-domain of attraction of G^*_θ, using the notation $F \in \mathcal{D}_{\mathrm{m}}(G^*_\theta)$, if the d.f. of $-X$ is in the max-domain of attraction of G_θ, i.e.

$$\boxed{R = 1 - F \in \mathcal{D}_{\mathcal{M}}(G_\theta).}$$

- The shape parameter θ, the so-called *extreme value index for minima* (**EVI$_{\mathrm{m}}$**), measures the heaviness of the *left-tail function* $F(x)$, as $x \to -\infty$ and the heavier the left-tail, the larger θ is.

- Similarly to what happens in the max-scheme, the **$\mathbf{EV_mD}$** is sometimes separated in the three following types:

Type I (min-Gumbel) :	$\Lambda^*(x) = 1 - \exp(-\exp(x)),\ x \in \mathbb{R}$
Type II (min-Fréchet) :	$\Phi^*_\alpha(x) = 1 - \exp(-(-x)^{-\alpha}),\ x \leq 0$
Type III (Weibull) :	$\Psi^*_\alpha(x) = 1 - \exp(-x^\alpha),\ x \geq 0.$

Remark 2. *In most applications involving lifetimes the limit laws G^*_θ are restricted to the case $\theta \leq 0$. In fact, a lifetime T is always nonnegative. Thus $-T$ is a r.v. with a finite right endpoint and can only be in the max-domain of attraction of a Weibull or a Gumbel. However, since there are systems with large durability, we also often consider the case $\theta > 0$.*

2.1 Rates of convergence and penultimate approximations

- Another important problem in **EVT** concerns the rate of convergence of $F^n(a_n x + b_n)$ towards $G_\gamma(x)$ or, equivalently, the finding of estimates of the difference

$$\boxed{d_n(F, G_\gamma, x) := F^n(a_n x + b_n) - G_\gamma(x).}$$

- In **EVT** there exists no analogue of the Berry-Esséen theorem that, under broad conditions, gives a rate of convergence of the order of $1/\sqrt{n}$ in the Central Limit Theorem.

- The rate of convergence depends here strongly on the right-tail of F, on the choice of the attraction coefficients, and can be rather slow, as first detected by **FISHER & TIPPETT** (1928), *PCPS*. These authors were indeed the first ones to provide a so-called penultimate max-Weibull approximation for $\Phi^n(x)$, with Φ the normal d.f.

- The modern theory of rates of convergence in **EVT** began with **ANDERSON** (1971), *Contributions to the Asymptotic Theory of Extreme Values*, Ph.D. Thesis, University of London. Developments have followed different directions that can be found in a recent paper by **BEIRLANT, CAEIRO & GOMES** (2012), *Revstat*.
- We refer here only the study of the structure of the remainder $d_n(F, G_\gamma, x)$, with $F \in \mathcal{D}_{\mathcal{M}}(G_\gamma)$, $\gamma \in \mathbb{R}$, i.e. the finding of $d_n \to 0$, as $n \to \infty$, and $\varphi(x)$ such that

$$\boxed{F^n(a_n x + b_n) - G_\gamma(x) = d_n \varphi(x) + o(d_n).}$$

We then say that the rate of convergence of $F^n(a_n x + b_n)$ towards $G_\gamma(x)$ is of the order of d_n.

- In this same framework, the possible penultimate behaviour of $F^n(a_n x + b_n)$ has been studied, i.e. the possibility of finding $H(x) = H_n(x)$, perhaps a max-stable d.f., such that

$$\boxed{F^n(a_n x + b_n) - H_n(x) = O(r_n), \quad r_n = o(d_n).}$$

- We refer **GOMES & PESTANA** (1987), In L. Puri *et al.* (eds.), *New Perspectives in Theoretical and Applied Statistics*, Wiley, and **GOMES & DE HAAN** (1999), *Extremes*, who derived, for all $\gamma \in \mathbb{R}$, exact penultimate approximation rates, under von Mises-type conditions and some extra differentiability assumptions. **KAUFMANN** (2000), *Extremes*, proved a similar result, but under weaker conditions.
- This penultimate or pre-asymptotic behaviour has further been studied by **RAOULT & WORMS** (2003), *AAP*, and **DIEBOLT & GUILLOU** (2005), *Revstat*, among others.

Despite of crucial, I am not going to speak about **first and second-order** conditions in the field of extremes. I just mention that:

- The first-order conditions are just necessary and sufficient conditions (or sufficient conditions) to have $F \in \mathcal{D}_{\mathcal{M}}(G_\gamma)$.
- The second-order conditions essentially measure the rate of convergence in the first-order conditions and depend upon a second-order parameter ρ (≤ 0).
- Now we come to the question answered in **GOMES & de HAAN** (1999): in what circumstances (i.e. for which combination of γ and ρ) can the convergence rate be improved by the use of penultimate approximations?
- **Answer**: To get any improvement we need to have $\rho = 0$ and to choose $\gamma(t) \equiv \eta(t) = v''(t)/v'(t)$, with $v(t) := u^{\leftarrow}(t)$, $u(x) := -\ln(-\ln F(x))$.

3. Ultimate and Penultimate Models for the Sequence of RFs of a Regular & Homogeneous PS System

We first state a theorem in **REIS & CANTO E CASTRO** (2009), *Revstat*.

Theorem 2 (Reis & Canto e Castro, 2009). *Any stable law for minima, i.e.* G_θ^*, *belongs to* $\mathcal{D}_{\mathcal{M}}(G_0)$, *i.e. there exist sequences* $\{a_n > 0\}_{n\geq 1}$ *and* $\{b_n \in \mathbb{R}\}_{n\geq 1}$ *such that*

$$\boxed{\left(G_\theta^*(a_n x + b_n)\right)^n \underset{n\to\infty}{\longrightarrow} G_0(x),}$$

uniformly in $\mathbb{R}$. *With* $c_n := -\ln(1-\exp(-1/n))$, *we can choose*

$$\boxed{a_n = \frac{1}{n(\exp(1/n)-1)c_n^{\theta+1}}, \qquad b_n = \begin{cases} \frac{1-c_n^{-\theta}}{\theta} & \text{if } \theta \neq 0 \\ \ln c_n & \text{if } \theta = 0. \end{cases}}$$

- We further state the following result [**REIS, CANTO e CASTRO, DIAS & GOMES**, 2013, MCAP]:

Theorem 3. *Let $F \in \mathcal{D}_{\mathrm{m}}(G_\theta^*)$, the min-domain of attraction of G_θ^*, the* **EV$_{\mathrm{m}}$D**, *i.e. let us assume that there exist sequences $\{a_n > 0\}_{n\geq 1}$ and $\{b_n \in \mathbb{R}\}_{n\geq 1}$ such that*

$$\boxed{1-(1-F(a_n x+b_n))^n \underset{n\to+\infty}{\longrightarrow} G_\theta^*(x) = 1-G_\theta(-x),}$$

$\forall x \in \mathbb{R}$ and where G_θ and G_θ^* are the **EV$_{\mathrm{M}}$D** *and the* **EV$_{\mathrm{m}}$D**, *respectively. Then, for all $\theta \in \mathbb{R}$, and adequate $(l_n, p_n) \to (\infty, \infty)$, as $n \to \infty$, there exist sequences $\{\alpha_n > 0\}_{n\geq 1}$ and $\{\beta_n \in \mathbb{R}\}_{n\geq 1}$ such that for all $t \in \mathbb{R}$,*

$$\boxed{F_n(\alpha_n t+\beta_n) := \left(1-(1-F(\alpha_n t+\beta_n))^{l_n}\right)^{p_n} \underset{n\to\infty}{\longrightarrow} \Lambda(t) \equiv G_0(t).}$$

Consequently, for a regular homogeneous **PS** *system, composed by p_n parallel subsystems with l_n components in series, the sequence of* **RFs**, *suitably normalized is such that*

$$\boxed{R_n(\alpha_n t + \beta_n) = 1 - F_n(\alpha_n t + \beta_n) \underset{n\to\infty}{\longrightarrow} 1 - G_0(t),}$$

for all $t \in \mathbb{R}$. We can indeed consider $\alpha_n = a_{p_n} a^*_{p_n}$, $\beta_n = a_{p_n} b^*_{p_n} + b_{p_n}$, where with the same (a_n, b_n) and c_n, as before,

$$\boxed{a^*_n = \frac{1 - \theta b^*_n}{n\Big(\exp(1/n) - 1\Big)c_n}, \qquad b^*_n = \begin{cases} -\frac{(l_n/(nc_n)^\theta - 1}{\theta} & \text{if } \theta \neq 0 \\ -\ln(l_n/(nc_n)) & \text{if } \theta = 0. \end{cases}}$$

Right tail penultimate behaviour of min-stable laws

Theorem 4. *For all $\theta \neq -1$, a min-stable law G^*_θ is under the conditions of the main theorem in* Gomes & de Haan (1999). *Consequently,*

$$\boxed{\lim_{n\to\infty} \frac{\left(G^*_\theta(a_n x + b_n)\right)^n - G_{\theta_n}(x)}{(\theta+1)/\ln^2 n} = \frac{x^3 G_0'(x)}{6},}$$

uniformly for all $x \in \mathbb{R}$, with (a_n, b_n) given before and where θ_n is asymptotically given by

$$\boxed{\theta_n = -\frac{\theta+1}{\ln n} + O\left(\frac{1}{n}\right).}$$

We further have

$$\boxed{\left(G^*_\theta(a_n x + b_n)\right)^n - G_0(x) = O(1/\ln n).}$$

Remark 3. *Note that if $\theta = -1$, von Mises first-order condition holds, but $\rho = -1$ and not zero, as needed for the existence of a penultimate approximation.*

If $\theta = -1$, the **ultimate** aproximation $\left(G^*_{-1}\left(a_n x + b_n\right)\right)^n \approx G_0\left(x\right)$ cannot be improved, we think, but one never knows . . . .

If $\theta < -1$, $\theta_n > 0 \quad \Longrightarrow \quad G_{\theta_n}$ is a **penultimate sequence** of **Fréchet distributions** for $\left(G^*_\theta\right)^n$.

If $\theta > -1$, $\theta_n < 0 \quad \Longrightarrow \quad G_{\theta_n}$ is a **penultimate sequence** of **Weibull distributions** for $\left(G^*_\theta\right)^n$.

4. A Small-Scale Simulation Study

We have simulated **PS** systems with lifetime components from different models, including the **EV$_{\mathrm{m}}$D**(θ), for $\theta = -2(0.5)1$, $p_n = 20, 50, 100$ and $l_n = 2, 10, 20, 50, 100$.

4.1 Testing the EV Condition

$$\boxed{\mathcal{H}_0 : G_n^* = 1 - (1 - F)^{l_n} \in \mathcal{D}_{\mathcal{M}}(G_\gamma), \text{ for some } \gamma \in \mathbb{R}}$$

– We have used the **test statistic** developed in **DIETRICH, DE HAAN & HUESLER** (2002), *Extremes* as well as the one in **DREES, DE HAAN, LI & PEREIRA** (2006), *JSPI*. We have further followed the **algorithm** proposed in **HÜSLER & LI** (2006), *Extremes*.

Conclusions: $\mathcal{H}_0$ was **not rejected** and there is no tipical behavior on the variation of l_n.

4.2 GoF Test for Gumbel Law

- We have also tested the ultimate law

$$\boxed{\mathcal{H}_0: \; F_n(x) = \left(1 - (1 - F(x))^{l_n}\right)^{p_n} = G_0\left((x - \lambda)/\delta\right)}$$

with $F_n(x)$ the $d.f.$ of the **lifetime** of a **PS** system and $(\lambda, \delta) \in \mathbb{R} \times \mathbb{R}^+$ a vector of unknown (location and scale) parameters.

- For the same set-up described above, we have used the **test statistic** proposed in **LAIO** (2004), *WRR*, not detailed here.

Conclusions

1. The null hypothesis was rejected except for $\gamma = -1$ (showing consistency between simulated and theoretical results).
2. Estimated type I error increases as θ moves away from -1.
3. Results are not much affected by a variation of l_n (particulary for $\mathrm{EV_m}$ components' lifetimes) and the estimated type I error decreases as p_n increases.

4.3 Gain in Accuracy

- Are the **estimates** of γ **closer** to the **penultimate parameter** γ_n rather than to the **ultimate parameter** zero?
- We have considered the theoretical value $\gamma_n = -(\gamma+1)/\ln n$ and have computed $\widehat{\gamma}$ through maximum likelihood (ML).
- On the basis of the $R = 1000$ runs, we have simulated the **MSE** and **BIAS**-values,

$$\boxed{\text{MSE}_P = (1/R)\sum_{i=1}^{R}(\widehat{\gamma}_i - \gamma_n)^2, \qquad \text{MSE}_U = (1/R)\sum_{i=1}^{R}\widehat{\gamma}_i^2,}$$

$$\boxed{\text{BIAS}_P = (1/R)\sum_{i=1}^{R}\widehat{\gamma}_i - \gamma_n, \qquad \text{BIAS}_U = (1/R)\sum_{i=1}^{R}\widehat{\gamma}_i.}$$

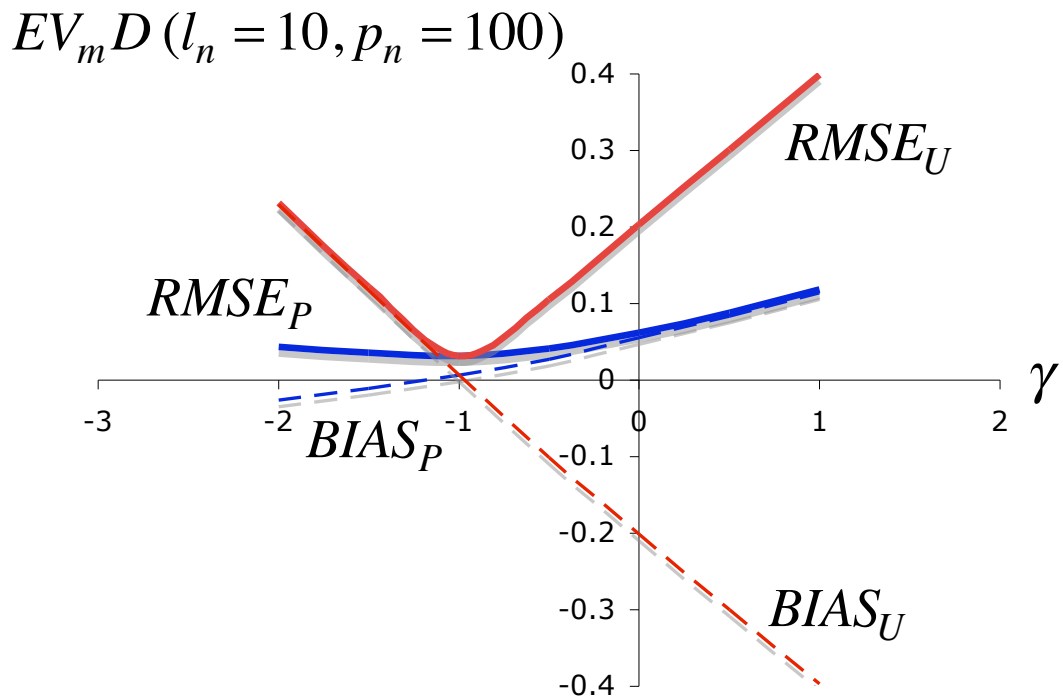

- In all simulations, we have got for $\gamma \neq -1$ $\text{MSE}_P < \text{MSE}_U$ and $|\text{Bias}_P| < |\text{Bias}_U|$. This leads us to the adoption of **Weibull** or **Fréchet models** for F_n.
- **Only** for $\gamma = -1$ were we led to the adoption of a **Gumbel model** for F_n.

5. Conclusions

- The assumption that the number n of system components goes to infinity can be considered somewhat restrictive. Hence the reason for considering a fixed large number of components and pre-asymptotic (penultimate) approximations.
- We are conscious that the restriction that the **RF** of all components of the system is the *same* is quite strong, and such an assumption was used *only* as a simplification.
- More intricate but similar work can be done for non-homogeneous systems.
- Also, an application of the developed theory, out of the scope of this paper, is now under progress.

REFERENCES

1. Anderson, C.W. (1971), *Contributions to the Asymptotic Theory of Extreme Values*, Ph.D. Thesis, University of London.
2. Barlow A.A. & Proschan, F. (1975). *Statistical Theory of Reliability and Life Testing: Probability Models*, Holt, Rinehart and Winston, Inc., USA.
3. Beirlant, J., Caeiro, F. and Gomes, M.I. (2012). An overview and open researh topics in statistics of univariate extremes, *Revstat* **10**:1, 1–31.
4. Diebolt, J. & Guillou, A. (2005). Asymptotic behaviour of regular estimators, *Revstat* **3**:1, 19–44.
5. Dietrich, D., de Haan, L. & Husler, J. (2002). Testing extreme value conditions, *Extremes*, **5**, 71–85.
6. Drees, H., de Haan, L., Li, D. & Pereira, T.T. (2006). Approximations to the tail empirical distribution function with applications to testing extreme value conditions, *Journal of Statistical Planning and Inference*, **136**, 3498–3538.
7. Fisher, R.A. & Tippett, L.H.C. (1928). Limiting forms of the frequency distributions of the largest or smallest member of a sample, *Proc. Camb. Phil. Soc.* **24**, 180–190.
8. Gnedenko, B.V. (1943). Sur la distribution limite du terme maximum d'une série aléatoire, *Ann. Math.* **44**, 423–453.
9. Gnedenko, B.V., Belyayev, Yu. K. & Solovyev, A.D. (1969). *Mathematical Methods of Reliability Theory*, Academic Press, USA.

10. Gomes, M.I. (1978), *Some Probabilistic and Statistical Problems in Extreme Value Theory*, Ph. D. Thesis, Univ. Sheffield.

11. Gomes, M.I. (1982a). Closeness of penultimate approximations in extreme value theory. *COMPSTAT 82*:**2** 119–120, Physica-Verlag.

12. Gomes, M.I. (1982b). Penultimate versus ultimate in extreme value theory—a simulation study. *14th European Meeting Statisticians Book of Absctracts* 149–150.

13. Gomes, M.I. (1984). Penultimate limiting forms in extreme value theory. *Ann. Inst. Statist. Math.* **36**, 71–85.

14. Gomes, M.I. (1986). Penultimate versus ultimate in statistical theory of extremes—a simulation study. *Comp. Statist. Data Anal.* **4** 257–267.

15. Gomes, M.I. (1994). Penultimate behaviour of the extremes. *In J. Galambos et al. (eds.), Extreme Value Theory and Applications*, 403–418, Kluwer Academic Publishers.

16. Gomes, M.I. & de Haan, L. (1999). Approximation by penultimate extreme value distributions, *Extremes,* **2**, 71-85.

17. Gomes, M.I. & Pestana, D. (1984). Domains of attraction and penultimate behaviour. *16th European Meeting of Statisticians Book of Abstracts* 202–203.

18. Gomes, M.I. & Pestana, D. (1987). Nonstandard domains of attraction and rates of convergence. In L. Puri *et al.* (eds.), *New Perspectives in Theoretical and Applied Statistics*, Wiley, 467–477.

19. Hüsler, J. & Li, D. (2006). On testing extreme value conditions, *Extremes* **9**, 69–86.

20. Kaufmann, E. (2000). Penultimate approximations in extreme value theory, *Extremes* **3**:1, 39–55.

21. Laio, F. (2004). Cramer-von Mises and Anderson-Darling goodness of fit tests for extreme value distributions with unknown parameters, *Water Resources Research* **40**, W09308, doi:10.1029/2004WR003204.

22. Raoult, J.P. & Worms, R. (2003). Rate of convergence for the generalized Pareto approximation of the excesses, *Adv. Appl. Probab.* **35**:4, 1007–1027.

23. Mises, R. von (1936). La distribution de la plus grande de n valeurs, *Revue Math. Union Interbalcanique* **1**, 141-160. Reprinted in *Selected Papers of Richard von Mises*, Amer. Math. Soc. **2** (1964), 271–294.

24. Reis, P. (2012). *Modelos Limite para a Fiabilidade de Sistemas de Grande Dimensão*. Tese de Doutoramento, Fac. Ciências de Lisboa, Lisboa.

25, Reis, P. & Canto e Castro, L. (2009). Limit model for the reliability of regular and homogeneous series-parallel systems, *Revstat* **7**, 3, 227–243.

26. Reis, P., Canto e Castro, L., Dias, S. & Gomes, M.I. (2013). Penultimate approximations in statistics of extremes and reliability of large coherent systems. *Methodology and Computing in Applied Probability*, DOI: 10.1007/s11009-013-9338-7

27. Reiss, R.-D. (1989). *Approximate Distributions of Order Statistics*. Springer, New York.

28. Samaniego, F. (1985). On closure of the IFR class under formation of coherent systems. *IEEE Trans. Reliab.* **34**, 69–72.

THAT's ALL and THANKS . . .